Multichip CMOS Image Sensor Structure for Flash Image Acquisition

Abstract— A new 3D Pinned Photodiode (HAD) CMOS image sensor structure applied in the 3-Dimensional multichip high speed digital flash image data acquisition system is explained and the important features are discussed.

Yoshiaki Hagiwara

AIPS

Artificial Intelligent Partner Laboratory

See Fig. 6 of JPA1975-134985

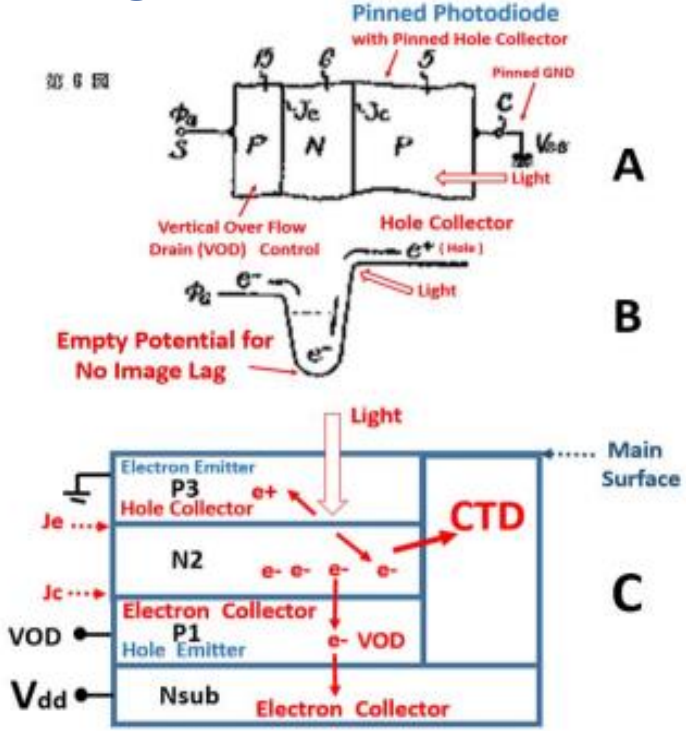

Fig. 4: The P+NPNsub junction type Hole Accumulation Diode (HAD)[6] invented by Hagiwara in 1975.

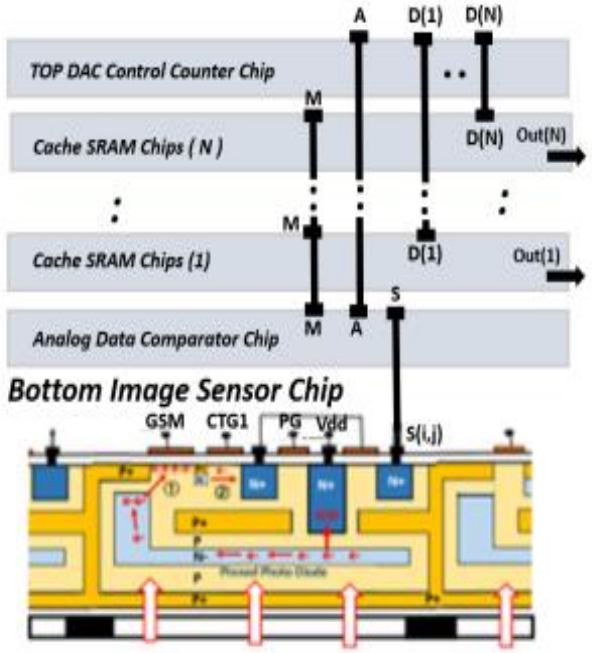

Fig. 11 : Metal Cu pillar signal pass wires thru multichip for the future 3D multichip flash image acquisition system.

See Fig. 7 of JPA1975-127646

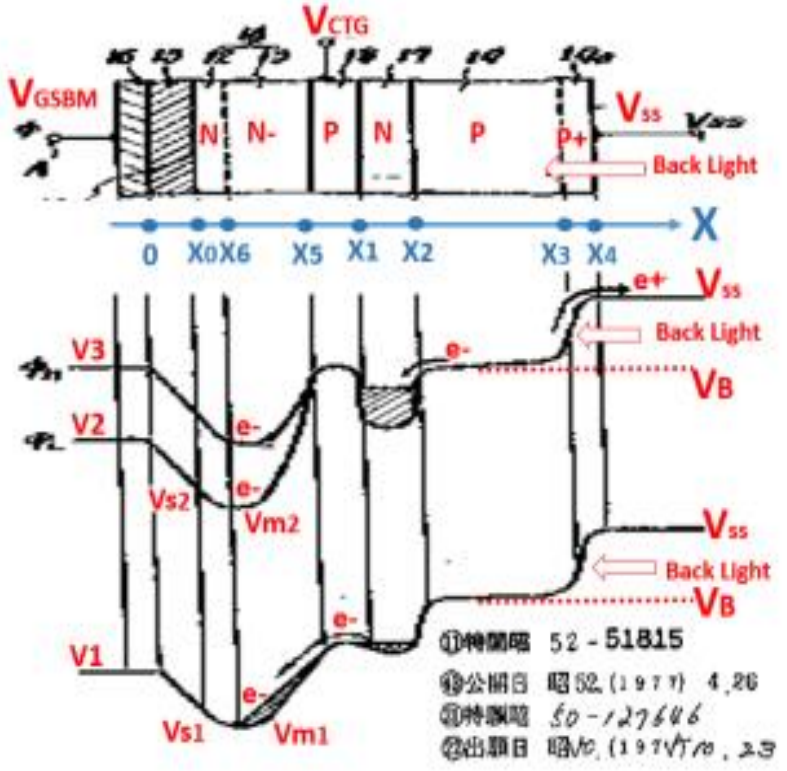

Fig. 8: The P+PNPN junction type Pinned Photodiode[10] with Global Shutter MOS Buffer Memory (GSBM) and the NPN junction type vertical charge transfer gating (CTG).